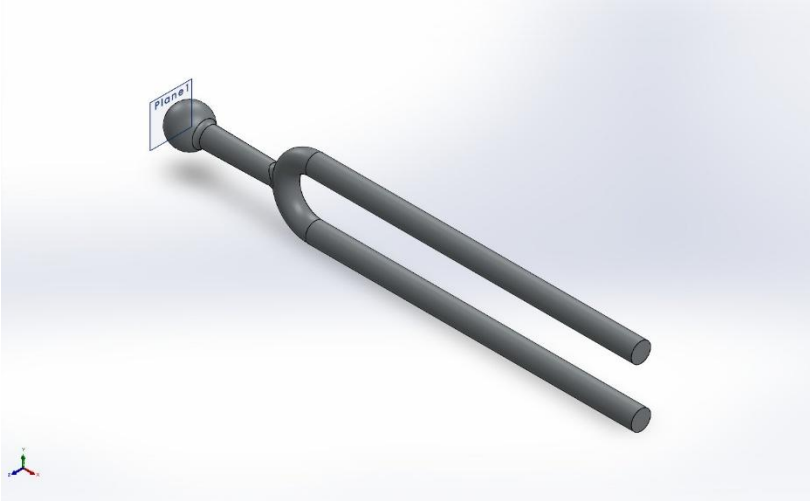

Simulation of tuning fork

Date: April 21, 2026
Designer: Solidworks
Study name: Drop Test
Analysis type: Drop Test

Table of Contents

Description 1
Assumptions 2
Model Information 2
Study Properties 3
Units 3
Material Properties 4
Interaction Information 4
Mesh information 5
Study Results 7
Conclusion 9

Description

No Data

Assumptions

Model Information

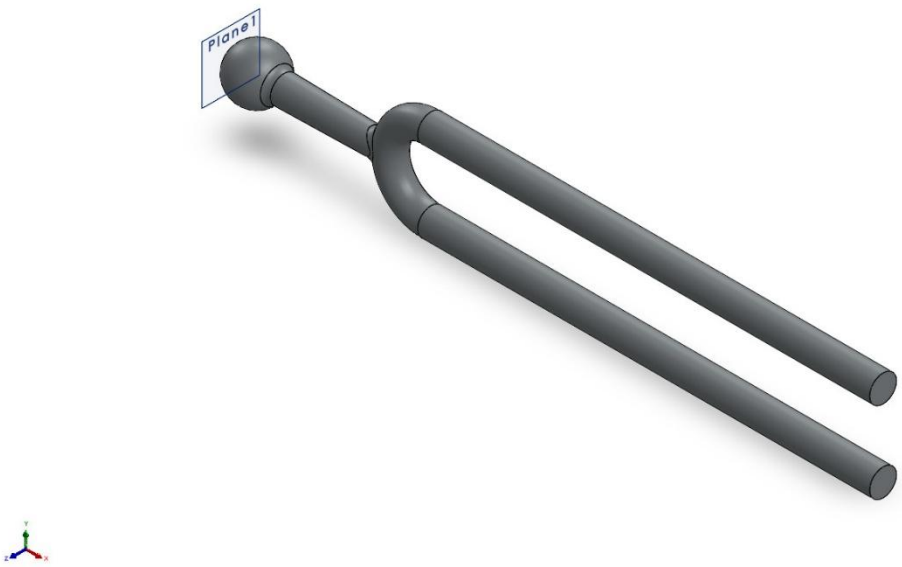

Model name: tuning fork
Current Configuration: Default

Solid Bodies			
Document Name and Reference	**Treated As**	**Volumetric Properties**	**Document Path/Date Modified**
Imported1	Solid Body	**Mass:0.0250199 kg** **Volume:3.20768e-06 m^3** **Density:7,800 kg/m^3** **Weight:0.245195 N**	**C:\Users\26869\Desktop\game\Solidwork\resource\model\37-43、49\tuning fork.SLDPRT**

Study Properties

Study name	Drop Test
Analysis type	Drop Test
Mesh type	Solid Mesh
Large displacement	On
Result folder	SOLIDWORKS document (C:\Users\26869\Desktop\game\Solidwork\resource\model\37-43、49)

Setup Information

Type	Drop height
Drop Height from Centroid	1,000 mm
Gravity	9.81 m/s^2
Gravity Reference	Plane1
Coefficient of friction	0
Target Stiffness	Rigid target
Critical Damping Ratio	0

Result Options

Solution Time After Impact	65.18 microsec
Save Results Starting From	0 microsec
No. of Plots	25
No. of Graph Steps Per Plot	20
Number of vertex	0

Units

Unit system:	SI (MKS)
Length/Displacement	mm
Temperature	Kelvin
Angular velocity	Rad/sec
Pressure/Stress	N/m^2

Material Properties

Model Reference	Properties	Components
	Name: Chrome Stainless Steel **Model type:** Linear Elastic Isotropic **Default failure criterion:** Max von Mises Stress **Yield strength:** 1.72339e+08 N/m^2 **Tensile strength:** 4.13613e+08 N/m^2 **Elastic modulus:** 2e+11 N/m^2 **Poisson's ratio:** 0.28 **Mass density:** 7,800 kg/m^3 **Shear modulus:** 7.7e+10 N/m^2 **Thermal expansion coefficient:** 1.1e-05 /Kelvin	SolidBody 1(Imported1)(tuning fork)
Curve Data:N/A		

Interaction Information

No Data

Mesh information

Mesh type	Solid Mesh
Mesher Used:	Standard mesh
Automatic Transition:	Off
Include Mesh Auto Loops:	Off
Jacobian points for High quality mesh	16 Points
Element Size	1.47542 mm
Tolerance	0.0737711 mm
Mesh Quality	High

Mesh information - Details

Total Nodes	12154
Total Elements	12161
Maximum Aspect Ratio	5.1464
% of elements with Aspect Ratio < 3	99.4
Percentage of elements with Aspect Ratio > 10	0
Percentage of distorted elements	0
Time to complete mesh(hh;mm;ss):	00:00:01
Computer name:	REMY

Mesh Quality Plots

Name	Type	Min	Max
Quality1	Mesh	-	-

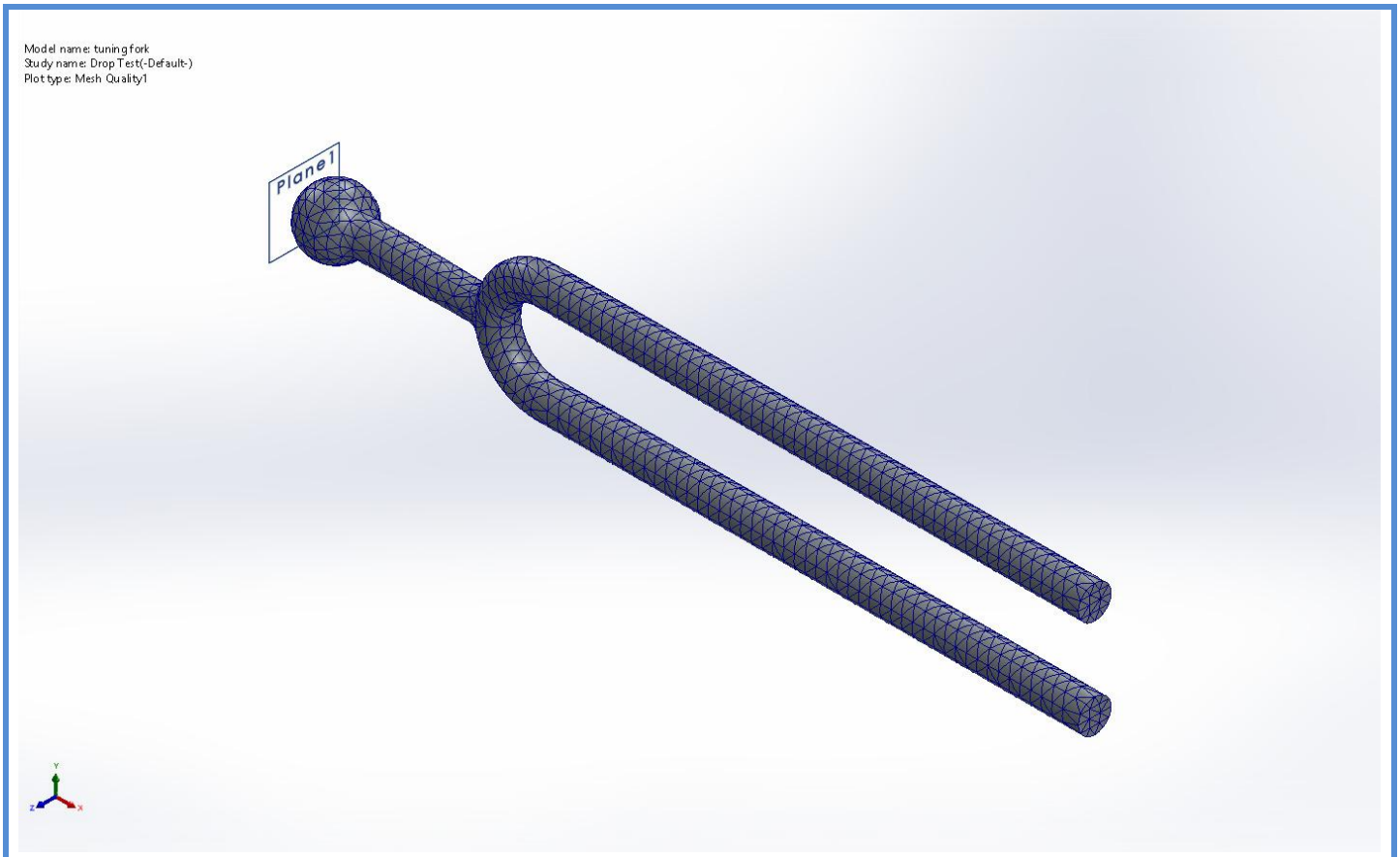

tuning fork-Drop Test-Quality-Quality1

Study Results

Name	Type	Min	Max
Stress1	VON: von Mises Stress	2.355e+05N/m^2 Node: 9754	2.169e+09N/m^2 Node: 154

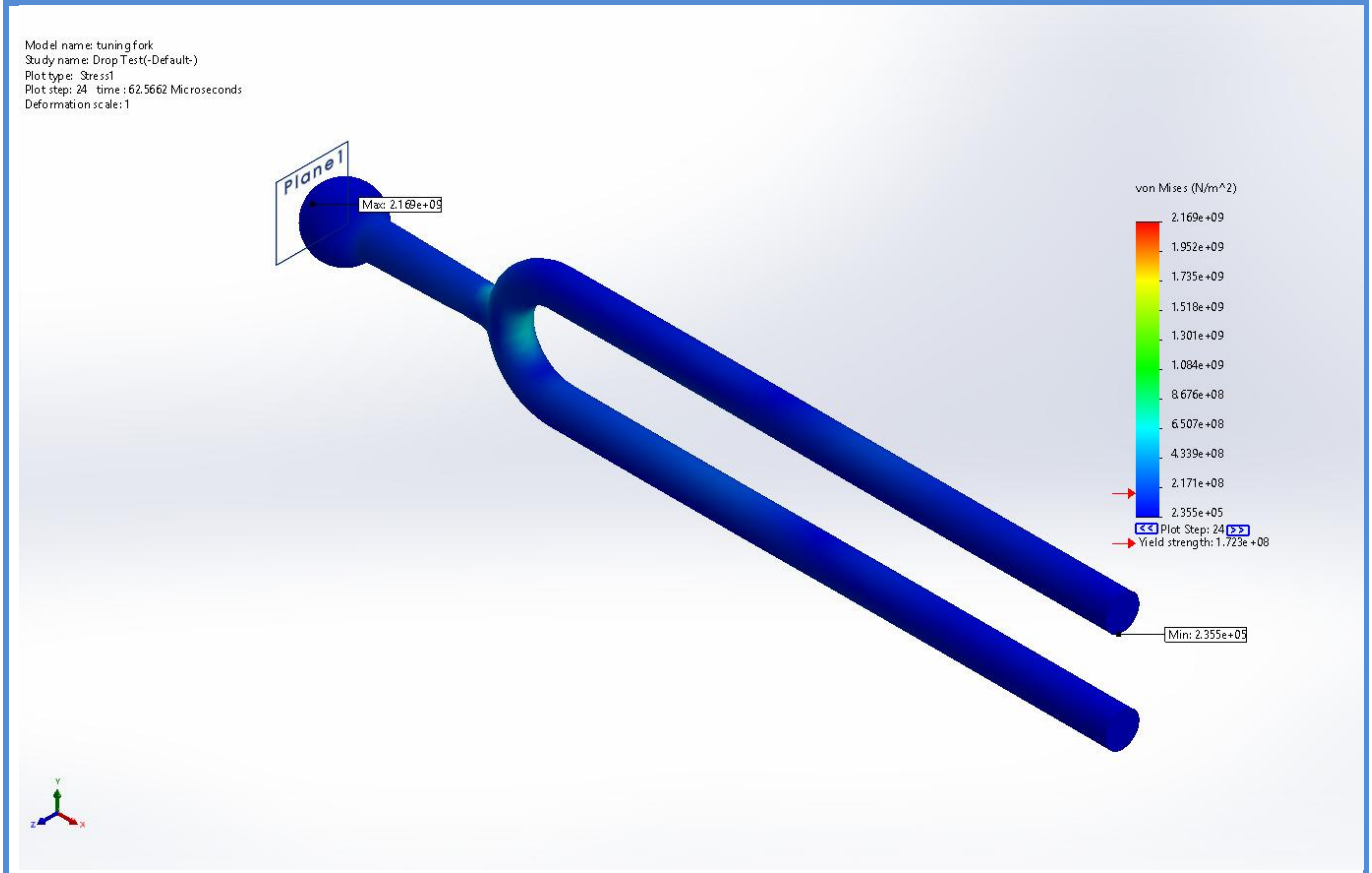

tuning fork-Drop Test-Stress-Stress1

Name	Type	Min	Max
Displacement1	URES: Resultant Displacement	2.361e-04mm Node: 154	8.965e-02mm Node: 1226

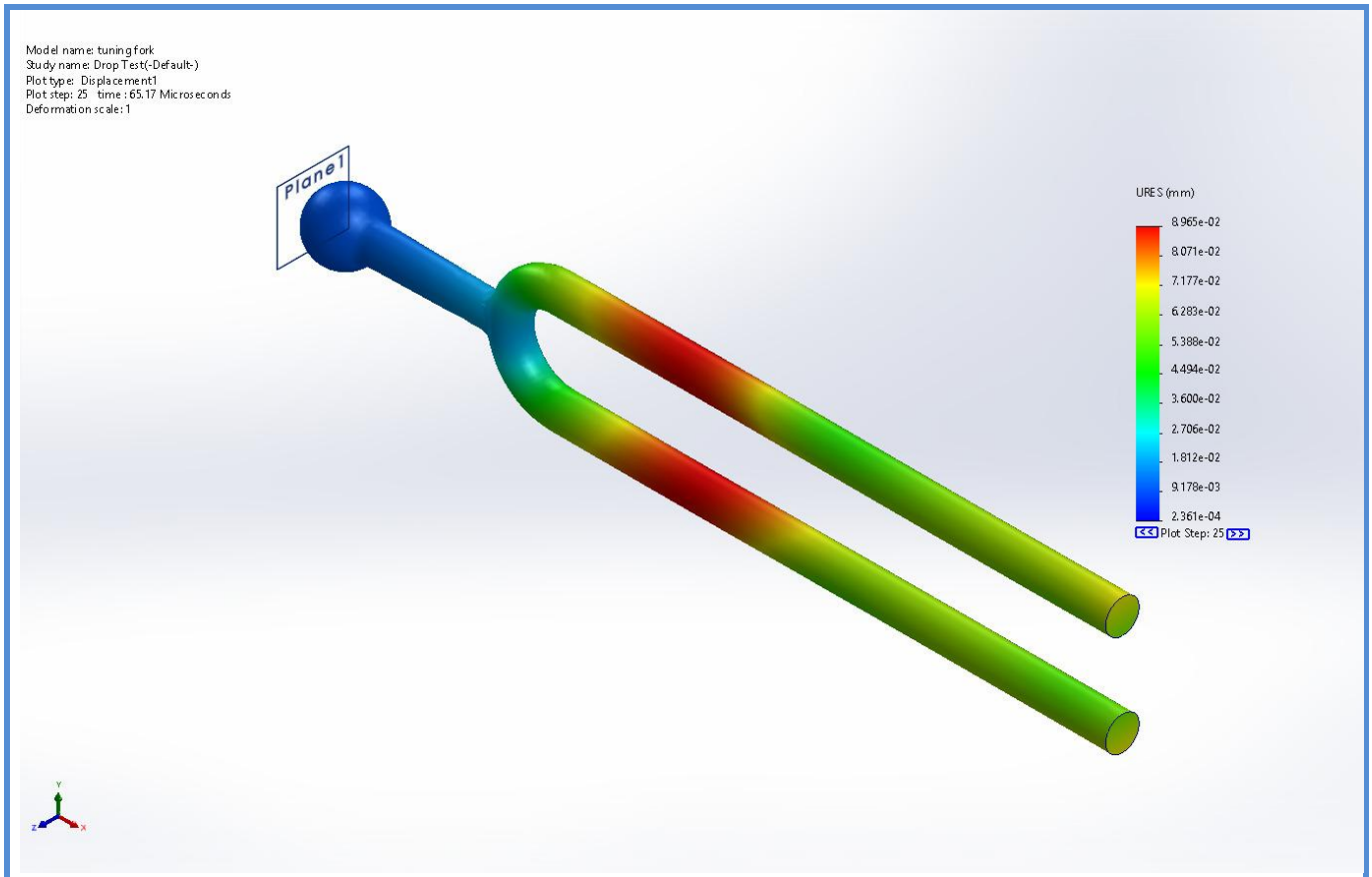

tuning fork-Drop Test-Displacement-Displacement1

Name	Type	Min	Max
Strain1	ESTRN: Equivalent Strain	1.112e-06 Element: 6727	3.120e-03 Element: 2011

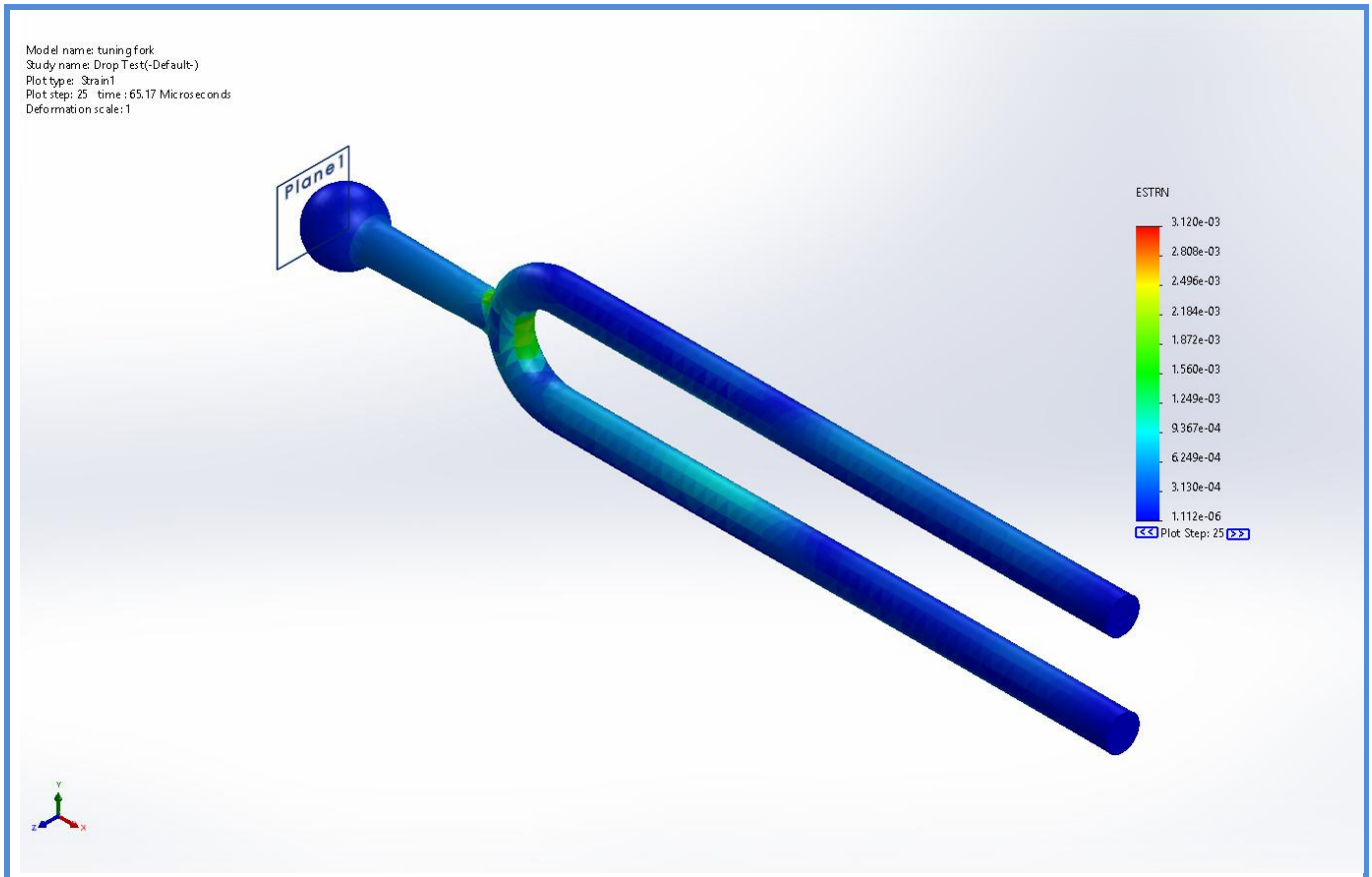

tuning fork-Drop Test-Strain-Strain1

Conclusion